Reg.No. | | | | | | | | | | | [14CE24]

SECOND SEMESTER B.Tech. UNIVERSITY EXAMINATION, JUNE– 2017

BASICS OF CIVIL ENGINEERING SYSTEMS

Time: 3 Hours **Maximum Marks: 70**

Answer any FIVE full questions choosing at least two from each part.

PART - A

1. a. Explain the scope of following in civil engineering. **06**
   i. Geotechnical Engineering
   ii. Surveying
   b. Define cement. Explain the different types of cement. **08**

2. a. Explain the effect of the Infrastructural facilities on socio-economic development of a country. **06**
   b. With a help of neat figure explain the different types of dams based on material. **08**

3. a. Explain the classification of force system with a neat figure. **08**
   b. List the various eco-friendly materials in construction. **02**
   c. Write short notes on rain water harvesting. **04**

4. a. Figure 4(a) shows the plan of resolving the entrance door with a four planks connected at the centre 'O'. Two persons approach simultaneously and exert equal force on the planks. If the resulting moment about the centre pivot 'O' is 50N-m. Find the magnitude of 'P'. **06**

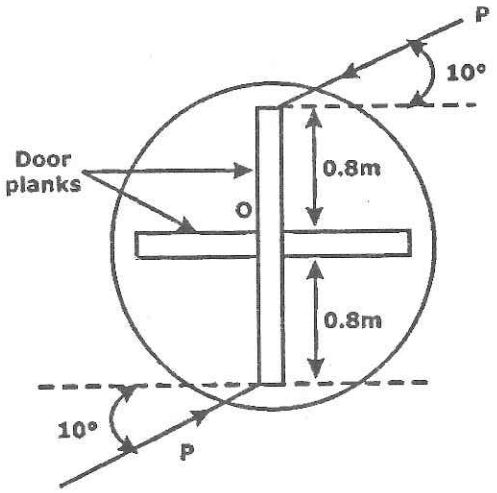

Fig. 4(a)

   b. Define couple. Explain the characteristics of couple. **06**
   c. State the principle of transmissibility of force. **02**

PART - B

5. a. State and prove Varigon's theorem. **06**

b. The resultant of two forces is 26kN, one of which is shown in the figure 5(b), determine the other force.

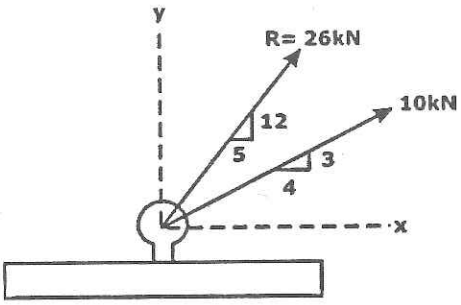

Fig. 5(b)

6. a. Three spheres are piled in the trench as shown in the figure 6(a). Self-weight and diameter of the cylinders is given below. Find the reactions developed at the contact surfaces.

Spheres	Weight	Diameter
A	3kN	600mm
B	3kN	600mm
C	6kN	800mm

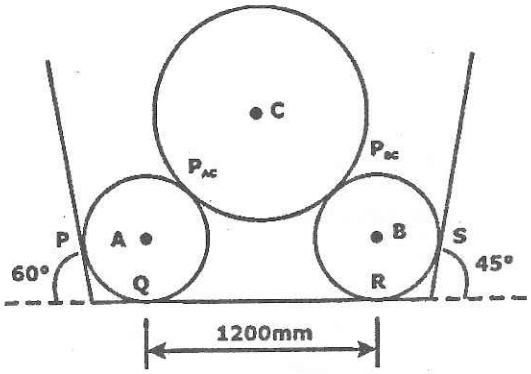

Fig. 6(a)

b. Find the support reactions at A and B for the beam shown in figure 6(b). **06**

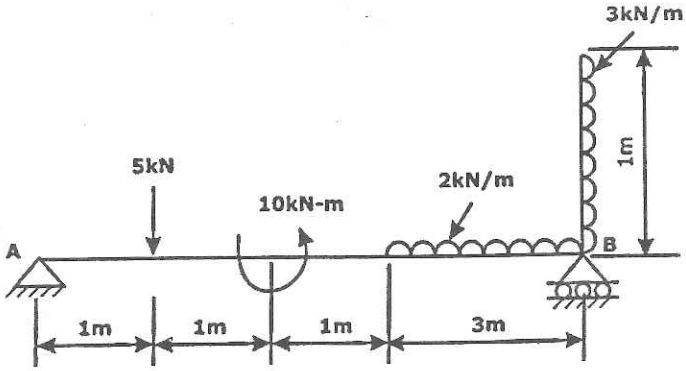

Fig. 6(b)

7. a. Locate the centroid for a sector of a circle symmetrical about horizontal axis. **06**

b. Calculate the moment of Inertia and radius of gyration of the shaded area shown in the figure 7(b) about x-axis. **08**

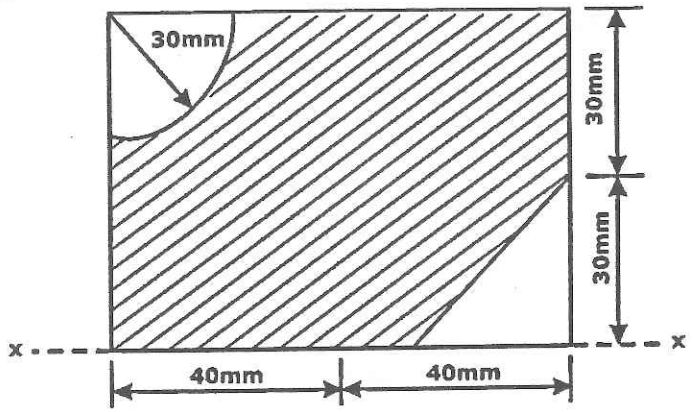

Fig. 7(b)

8. **a.** Define co-efficient of friction. Show that the angle of friction is equal to the angle of repose. **06**

b. What should be value of angle 'θ' so that motion of the block 200N impends down the plane, take μ=0.3 for all contact surfaces as shown in the figure 8(b). **08**

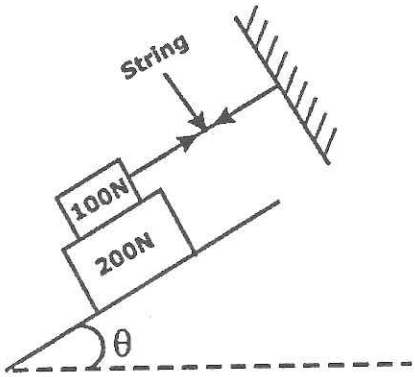

Fig. 8(b)